ARRAKIS SYSTEMS

On-Air Light

Application Note

For MARC

Oct 23, 2015

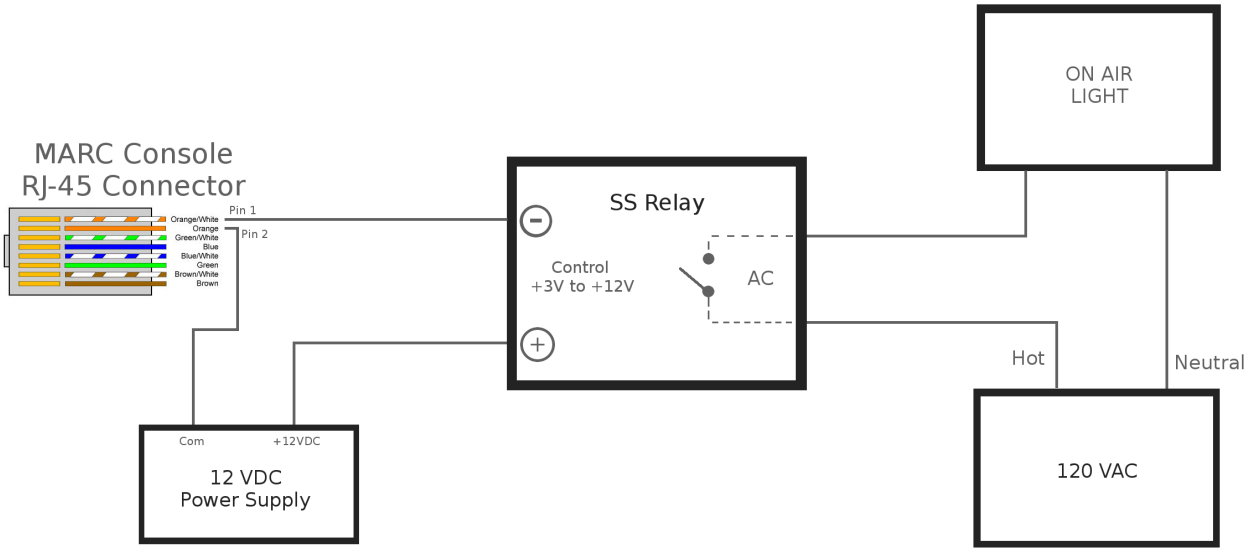

Due to the variety of products that are available we do not have a specific unit that we would recommend. However the key issue is to isolate the audio console from the on air lights AC voltage and still provide the necessary on off control. The circuit above should handle this interface issue with a minimum of wiring and components.

Solid-state relays are very useful when using them for on air light switching. They have a control voltage range from 3 to 24 volts DC. They usually take only 5 ma of current to operate. Check with your local electronics supply or your electrical supplier when purchasing solid-state relays. The TRW Crydome series is very common with a DC control voltage input range of 3 to 24vdc and a switch side of 120 to 220vac at 10 amps. The external control DC power supply that we would recommend is a wall adaptor type from 5 to 12vdc at 200 to 500ma current rating.

AC Power Connection

AC Power (Hot) - - - - SS Relay - - - - Lamp - - - - AC Power (Neutral)

Wiring to your Audio Console:

Wire the SS Relay (+) to your external 12v DC power supply positive.

Connect the SS Relay (-) to the audio consoles Miscellaneous I/O connector pin 1 (White/Orange).

Connect the External 12v DC power supply (-) or common to the audio consoles Miscellaneous I/O connector pin 2 (Orange/White).

Warning:
Make sure you do not use the audio consoles DC power for the on air light relay. If there is a problem you risk the chance of damaging the audio console and going off the air! Always use an external DC power supply such as a wall adaptor type. They are inexpensive and if there is a problem you will limit the damage to the on air light not the audio console.